UNIT - V

Power Amplifiers & Multivibrators.

ECIA 266 (1)

(1). What is the difference between voltage amplifier and power amplifier? Classify power amplifiers according to mode of operation. D8

Voltage Amplifier	Power Amplifier
1. Voltage Amplifier is used to raise the voltage level of weak signal.	1. The power Amplifier Increases the power level of weak signal.
2. voltage amplifier acts as the 1st stage.	2. The power Amplifier acts as the last stage.
3. RC coupling networks are widely used	3. Transformer coupling networks are used.
4. o/p Impedance is high.	4. output Impedance is low.
5. AC power output for voltage is low.	5. AC power output for voltage is high.
6. The Bandwidth range is from (5 to 100).	6. The Bandwidth range is from (100 to 200).

Power Amplifiers

- Based on frequency range
  - Audio freq
  - Radio freq
  - vedio freq
- Based on mode of operation
  - Class A
  - Class B
  - Class AB
  - Class C
- Based on configuration.
  - Single ended Am
  - Push pull Amp
  - Complementry Symmentry Amp

Mode of operation :-

1) class A :-

The collector current flows for complete full cycle of Input signal is called class A.

→ Conduction angle is 360°

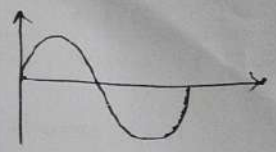

2) class B :-

The collector current flows for half cycle of Input signal is called class B.

→ conduction angle is 180°.

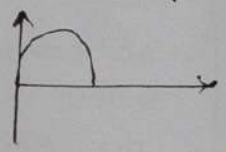

3) class AB :-

Collector current flows for more than half cycle but less than full cycle.

→ conduction angle $180° > \theta < 360°$

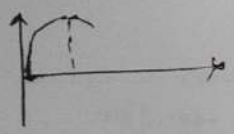

4) class C :-

Collector current flows for less than half cycle is called class C.

→ conduction angle is $< 180°$

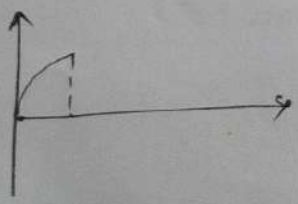

Distinguish class A, class B & class C amplifiers?

Parameters	class A	class B	class AB	Class C
1. operating region	Active region	cut-off region	above cut-off region	below cut-off region.
2. Q-Point	Midpoint of dc Load line	x-axis on	above x-axis	below x-axis
3. Conduction angle	360°	180°	180° > ϕ < 360°	< 180°
4. Efficiency	25%	78.5%	50% ≥ η > 78.5%	90%
5. Distortions	More	moderate	Moderate	less
6. Applications	audio amp	audio amp	Audio amp	tuned amplifier
7. Uses	Require low power & low distortion	Reduces heat dissipiation	Improves the linearity	Reduces distortion
8. Q-point values	360°	180°	In b/w 180° to 360°	Less than 180°
9. DC. I/P Power	$P_{DC} = V_{CC} I_{CQ}$	$P_{DC} = 2 \frac{I_c(max)}{\pi \times V_{CC}}$	—	$V_{CC} \times I_{dc}$
10. A.C O/P Power	$\frac{V_m I_m}{8}$	$\frac{I_c \times V_{CC}}{2}$	—	I_{dc} $V_{CC} - V_{CE(sat)}$

3a) Define conversion efficiency. Determine the Maximum output conversion efficiency for series fed class A Amplifier

A) Series fed class A power Amplifier :-

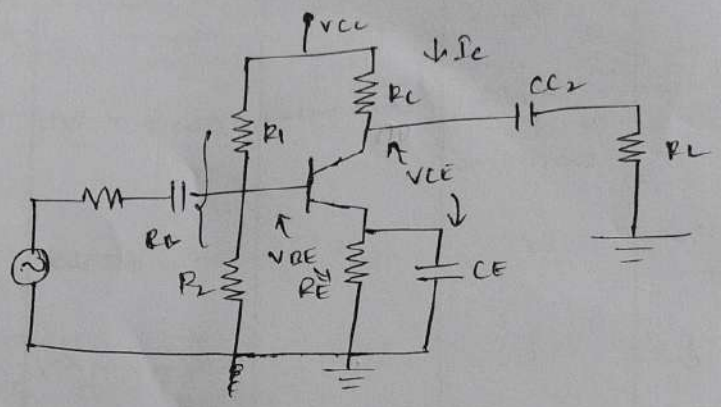

→ Applying KVL across the Input side

$\therefore R_1 \| R_2 = R_B$

$$V_{CC} = I_B R_B + V_{BE}$$

$$\boxed{I_B = \frac{V_{CC} - V_{BE}}{R_B}}$$

→ Applying KVL across the output side

$$V_{CC} = I_C R_C + V_{CE}$$

$$\boxed{V_{CE} = V_{CC} - I_C R_C}$$

D.C load line :-

It is drawn by plotting the points such as

Point 1 $\left(V_{CE} = 0 \,,\; I_C = \frac{V_{CC}}{R_C}\right)$

Point 2 $\left(I_C = 0 \,,\; V_{CE} = V_{CC}\right)$

output characteristics :-

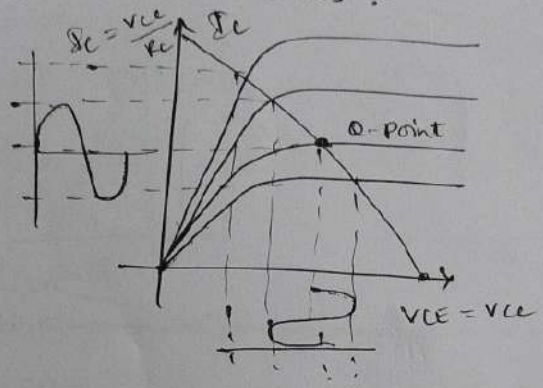

Efficiency of class A power Amplifier :-

Efficiency :- The power amplifier gives the efficiency as the ratio of AC output power to dc i/p power.

$$\text{eff} = \frac{\text{a.c o/p power}}{\text{d.c i/p power}} = \frac{P_{a.c}}{P_{d.c}}$$

$$\eta = \frac{P_{a.c}}{P_{d.c}}$$

(i) o/p a.c power :-

$$P_{ac} = V_p \cdot I_p$$

$$= V_p \cdot \frac{V_p}{R_L}$$

$$= \frac{(V_p)^2}{R_L} \leftarrow \text{Rms voltage.}$$

$$V_m = \sqrt{2}\, V_{rms}$$

$$V_{rms} = \frac{V_m}{\sqrt{2}}$$

Now let us write V_p in terms of Maximum voltage as

$$P_{a.c} = \frac{\left(\frac{V_m}{\sqrt{2}}\right)^2}{R_L} = \frac{V_m^2}{2R_L}$$

$$P_{a.c} = \frac{V_m}{2} \cdot \frac{V_m}{R_L} \Rightarrow \frac{V_m}{R_L} = I_m$$

$$P_{a.c} = \frac{V_m I_m}{2}$$

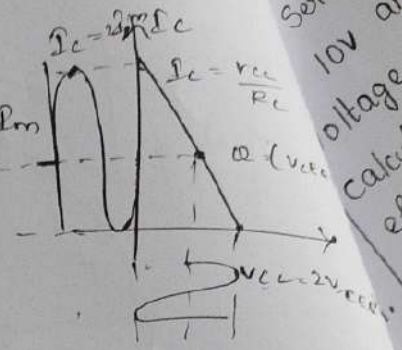

$$P_{ac} = \frac{V_m I_m}{2}$$

At the Q-point

$$P_{a.c} = \frac{V_{CEQ} \cdot I_{CQ}}{2}$$

(ii) I/P d.c power :-

$$P_{dc} = V_{cc} \cdot I_{CQ}$$

$$\eta = \frac{P_{ac}}{P_{dc}}$$

$$\eta = \frac{\frac{V_{CE} \cdot I_{CQ}}{2}}{V_{cc} \cdot I_{CQ}}$$

$$\eta = \frac{V_{CEQ} \cdot I_{CQ}}{2} \times \frac{1}{V_{cc} I_{CQ}}$$

$$= \eta = \frac{1}{4} = 0.25$$

$$\boxed{\eta = 25\%}$$

∴ Hence the efficiency of class A power amplifier is 25% by which the distortions at the o/p can be reduced.

Series fed class A amplifier uses a supply voltage of 10v and load resistance of 20 ohms. The Ac input voltage results in a base current of 4mA peak. calculate input dc power, AC output power, conversion efficiency.

A. Given data,

Supply voltage, $V_{cc} = 10v$

Load resistance, $R_L = 20\Omega$

Peak to peak Base current, $I_b = 4\,mA$.

Step 1:-

calculate the quiescent collector current

$$I_{CQ} = \frac{V_{cc}}{R_L}$$

$$I_{CQ} = \frac{10}{20\Omega}$$

$$I_{CQ} = 0.5\ Amp$$

step-2:-

calculate dc i/p power

$$P_{DC} = V_{cc} \cdot I_{CQ}$$

$$= 10 \times 0.5\,A$$

$$P_{DC} = 5W$$

step-3:-

calculate ac o/p power

$$P_{ac} = \frac{V_{CEQ} \cdot I_{CQ}}{2} \qquad [\because V_{CEQ} = I_{CQ} \cdot R_L]$$

$$= \frac{I_{CQ} \cdot R_L \cdot I_{CQ}}{2}$$

$$P_{ac} = \frac{(I_{c(q)})^2 . R_L}{2}$$

$$= \frac{(0.5)^2 (20\Omega)}{2}$$

$$P_{ac} = 2.5\,W$$

Step-4:- conversion eff,

$$\% \eta = \frac{P_{ac}}{P_{dc}} \times 100$$

$$= \frac{2.5W}{0.5W} \times 100$$

$$\% \eta = 50\%$$

4.) Draw the circuit diagram of class B push pull amplifier and determine its efficiency.

A) Class B push pull Amplifier:

In class B power amplifier the collector current flows for half cycle of input signal. Hence in conduction angle is 180°. In order to get a full cycle output two identical transistors are used to conduct in alternate half cycles of the i/p signal to get 360° output.

for designing in these way there are two different configurations.

(i) push-pull class B power amplifier.

↳ The two transistors must be either NPN/PNP.

) complementary symmentry push-pull amplifier
↳ the two transistors can be of any type.

circuit Diagram:

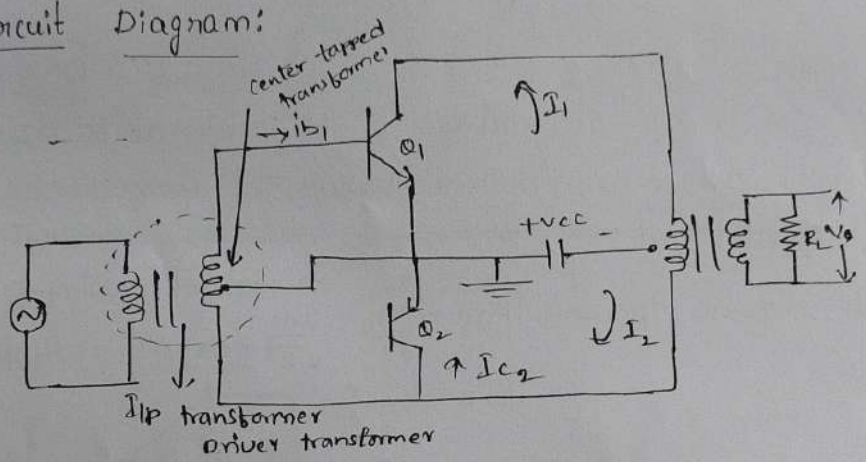

calculate the efficiency:

→ Efficiency of class B power amplifier is calculated as

$$\eta = \frac{P_{dc}}{P_{ac}} \rightarrow (1)$$

(i) o/p dc power:

The Q point on the x axis is

$V_{CEQ} = V_{CC}, I_{CQ} = 0$

The two collector currents by the transistor will be in the same direction with 180°.

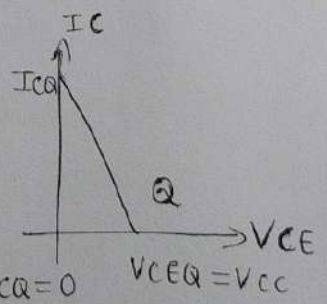

class B operates in cut off region.

Hence, dc current $I_{dc} = \frac{I_m}{\pi} + \frac{I_m}{\pi}$

$$I_{dc} = \frac{2I_m}{\pi}$$

Now, the total dc power $P_{dc} = V_{cc} . I_{dc}$ I_{CQ}

$$= V_{cc} \times I_{dc}$$

$$P_{dc} = V_{cc} \times \frac{2 I_m}{\pi} \rightarrow (1)$$

<u>Ac power</u>:

The o/p current and voltage at the peak values are expressed as I_m & V_m. The Rms values of these peak values are represented as

Now the ac power, $P_{ac} = \frac{V_m}{\sqrt{2}} \cdot \frac{I_m}{\sqrt{2}}$

$$P_{ac} = \frac{V_m . I_m}{2}$$

$$P_{ac} = \frac{V_m^2}{2R_L} \rightarrow (2) \quad \left[\because I_m = \frac{V_m}{R_L}\right]$$

$$P_{ac} = \frac{V_m}{2} \cdot \frac{V_m}{R} \Rightarrow \frac{V_m}{R} = I_m$$

$$P_{ac} = \frac{V_m I_m}{2}$$

$$\eta = \frac{V_m^2}{2R_L} \times \frac{\pi}{V_{cc} 2 I_m}$$

Now, let us make the value of $P_{ac} = \frac{V_m I_m}{2}$

$$= \frac{V_m \cancel{I_m}}{2} \times \frac{\pi}{2 \cancel{I_m} V_{cc}}$$

$$\eta = \frac{V_m}{2} \times \frac{\pi}{2 V_{cc}}$$

$$\eta = \frac{\pi}{4} = 0.785$$

$$\% \eta = 0.785 \times 100$$
$$= 78.5\%$$

Hence, for class B push pull amplifier efficiency is 78.5% which is higher than class A power amplifier. Hence it reduces the output distortions.

Draw the circuit diagram of class AB push pull amplifier and determine its efficiency.

Class AB power amplifier;

→ collector I_C to flow for greater than half cycle & less than full cycle.

→ conduction angle : $180° > \phi < 360°$

→ Transistor operates just above the cut off region.

→ Q-point is located just above the x-axis

Circuit Diagram:

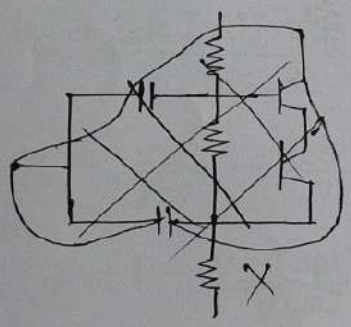

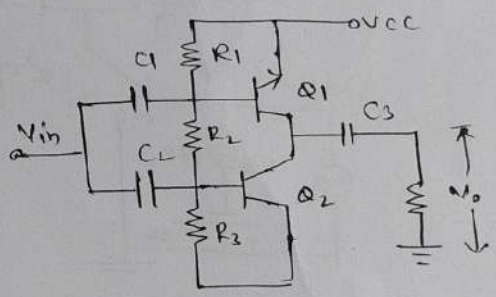

For this design as the temperature varies the fixed bias voltage (0.7v) will not be maintain constant due to this region the R_2 resistor is replaced with two diodes.

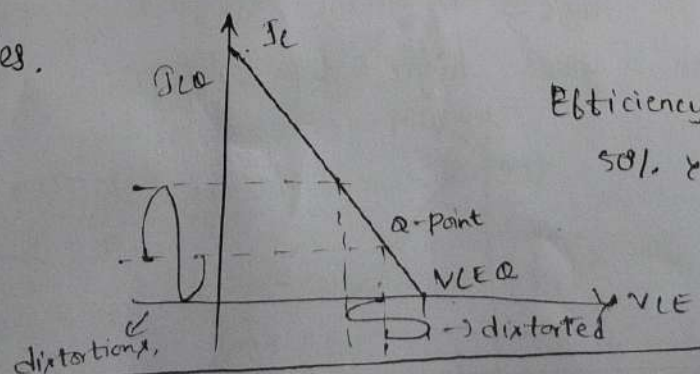

Efficiency :-

$50\% \le \eta < 78.5\%$

6) Draw the circuit diagram of class C power amplifier & determine its efficiency.

A) <u>class C power Amp.</u>

→ collector current I_C flows for less than half cycle.

→ conduction angle : < 180°

→ Transistor operates below the cut-off region.

→ Q-point should be located below the x-axis

<u>circuit Diagram:</u>

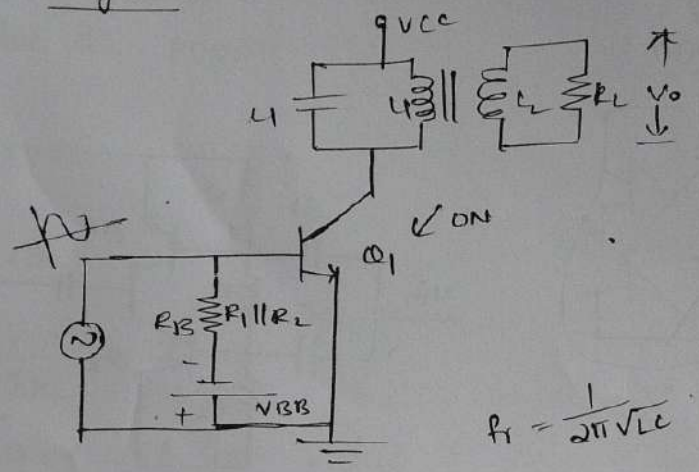

$f_r = \frac{1}{2\pi\sqrt{LC}}$

<u>Operation:</u>

→ ac i/p signal is applied.

→ when the i/p voltage > Biasing vol of VBB.

→ Transistor starts conducting.

→ The i/p freq = Resonant freq.

Inturn it gives high o/p voltage.

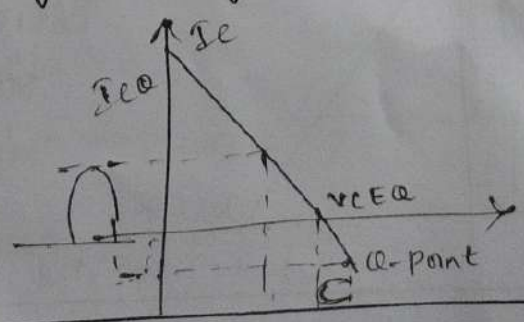

Efficiency :-

$\eta = \frac{P_{ac}}{P_{dc}}$ — (1)

dc power supply to the transistor is given by

$P_{dc} = V_{cc} \times I_{dc} \rightarrow (2)$

The power dissipated by the transistor is given as

$$P_d = V_{CE}(sat) . I_{dc}$$

Now, the ac power across the load, $P_{ac} = P_{dc} - P_d$

$$= V_{cc} I_{dc} - V_{CE}(sat) . I_{dc}$$

$$P_{ac} = I_{dc} [V_{cc} - V_{CE}(sat)] \rightarrow (3)$$

Sub eq (2) & (3) in eq (1)

$$\eta = \frac{\cancel{I_{dc}} [V_{cc} - V_{CE}(sat)]}{V_{cc} . \cancel{I_{dc}}}$$

$V_{CE}(sat) = 1V$
$V_{cc} = 10V$

$$\eta = \frac{\cancel{V_{cc}}}{\cancel{V_{cc}}} - \frac{V_{CE}(sat)}{V_{cc}}$$

$$\eta = 1 - \frac{V_{CE}(sat)}{V_{CE}}$$

$$= 1 - \frac{1}{10}$$

$$\eta = 0.9$$

$$\% \eta = 90\%$$

7.) What are multivibrators? Discuss various types of multivibrators and their applications.

A.) MULTIVIBRATOR

Multi---means---Many
Vibrate---means---Oscillations

Definition:
A circuit which can oscillate at a number of frequencies is

called Multivibrator.

[or]

A multivibrator is an electronic circuit which is used to implement two state devices like oscillator, timer & flip flops.

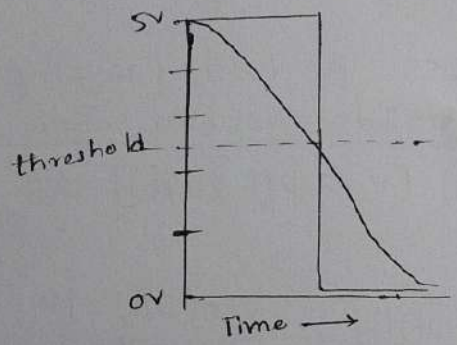

TYPES OF MULTIVIBRATOR

There are basically three different types of multivibrators,

- Monostable Multivibrator

  A one-shot multivibrator that has only ONE stable state as once externally triggered it returns back to its first stable state.

- Bistable Multivibrator

  A flip-flop that has TWO stable states producing a single pulse either HIGH or Low in value.

- Astable multivibrator

  A free-running multivibrator that has NO stable states but switches continously between two states this action produces a train of square wave pulses at a fixed known frequency.

CLASSIFICATION OF MULTIVIBRATOR

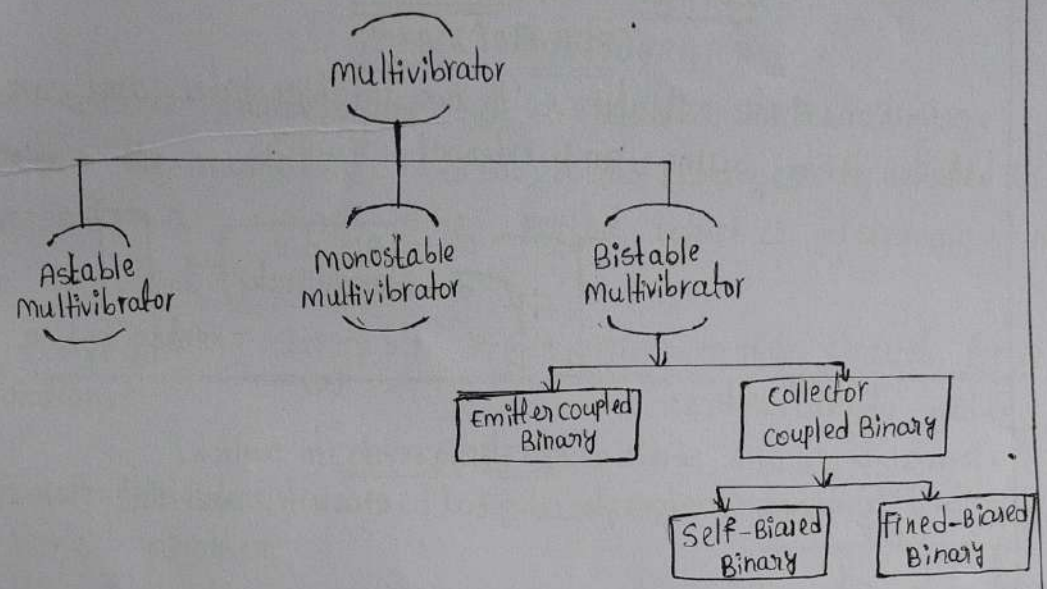

MONOSTABLE MULTIVIBRATOR
(One-shot Multivibrator)

Definition: A multivibrator with one stable state and one(equal) quasi-stable state.

(A "quasi-stable state" refers to a state in a system that is not truly stable but can remain in that state for a certain period before transitioning to another state

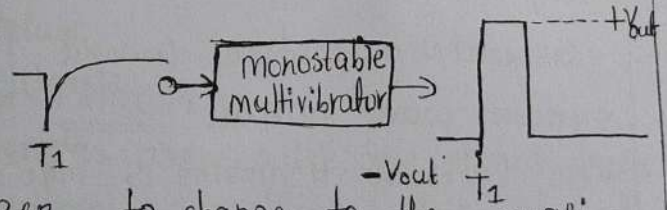

- Key characteristics:
- Requires an external trigger to change to the quasi-stable state.
- Requires to the stable automatically after a fixed time period.
- (Requires) used in pulse stretching, timers, and delay circuits.
- Applications:

* Pulse Generation, Timer circuits, motor control, Alarm systems

BISTABLE MULTIVIBRATOR
(Flip-Flop)

• Definition: A multivibrator with two stable states and can switch between them using an external trigger.

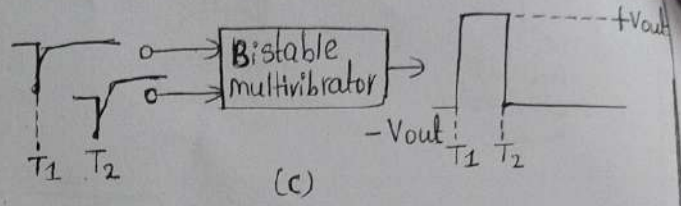

(c)

• Key characteristics:

• Remains in one state until triggered to switch.

• Used in memory storage, digital circuits, and flip-flop operations.

• Applications:

* Digital counters, control systems, shift Registers

ASTABLE MULTIVIBRATOR
(Free-running multivibrator)

• Definition: A multivibrator that has no stable state and continously oscillates between high and low states.

• Key characteristics:

• Generates a continous (No input signal) square wave output.

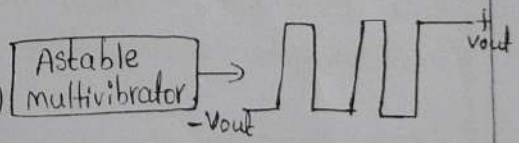

• No external triggering is required.

• Used in clock generators, waveform generation, and blinking LED circuits.

• Applications:

* LED and Light Flashing circuits, Frequency Generation, Security and Burglar Alarm Systems.

escribe the working principle of an Astable multivibrator?

ASTABLE MULTIVIBRATOR

* As astable multivibrator has no stable states.
* Once the multivibrator is ON, it just changes its states on its own after a certain time period which is determined by the R_C time constants.
* A dc power supply or V_{CC} is given to the circuit for its operation.

CONSTRUCTION

>> Two transistors named Q_1 and Q_2 are connected in feedback to one another.

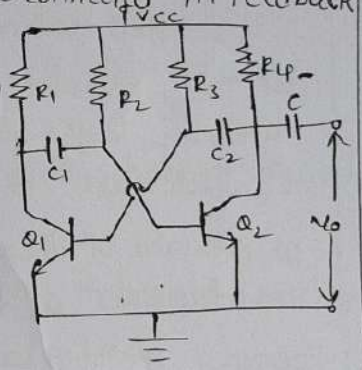

>> The collector of transistor Q_1 is connected to the base of trans Q_2 through the capacitor C_1 and vice versa.

>> The emitters of both the transistors are connected to the gro

>> The collector load resistors R_1 and R_4 and the biasing resistors R_2 and R_3 are of equal values. The capacitors C_1 and C_2 are of equal values.

WORKING PRINCIPLE

>> As no transistor characteristics are alike, one of two transistors say Q_1 has its collector current increase and thus conducts.

>> The collector of Q_1 is applied to the base of Q_2 through C_1.

>> This connection lets the increased negative voltage at the collector of Q_1 to get applied at the base of Q_2 and its collector current decreases.

>> This continous action makes the collector current of Q_2 to decrease further.

>> This current when applied to the base of Q_1 makes it more negative and with the cumulative actions Q_1 gets into saturation and Q_2 to cut off.

>> Thus the output voltage of Q_1 will be $V_{CE(sat)}$ and Q_2 will be equal to V_{CC}.

>> The capacitor C_1 charges through R_1 and when the voltage across C_1 reaches 0.7V, this is enough to turn the transistor Q_2 to saturation.

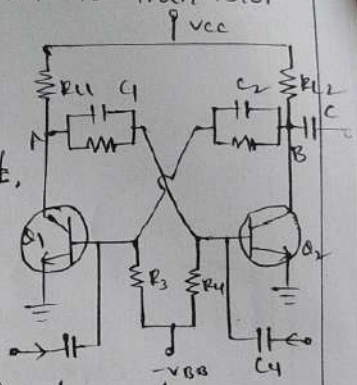

>> As this voltage is applied to the base of Q_2, it gets satura decreasing its collector current.

>> This reduction of voltage at point B is applied to the base of transistor Q_1 through C_2 which makes the Q_1 reverse bias.

>> A series of these actions turn the transistor Q_1 to cut off and transistor Q_2 to saturation.

>> Now point A has the potential V_{CC}. The capacitor C_2 charges through R_2.

>> The voltage across this capacitor C_2 when gets to 0.7V, turns on the transistor Q_1 to saturation.

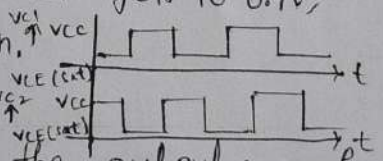

OUTPUT WAVEFORMS

>> Hence the output voltage and the output waveforms are formed by the alternate switching of the transistors Q_1 and Q_2. The time period of these ON/OFF states depends upon the values of biasing resistors and capacitors used, i.e., on the R_C values used. As both the transistors are operated alternately, the output is a square waveform, with the peak amplitude of V_C.

ribe the working principle of monostable multivibrator?

MONOSTABLE MULTIVIBRATOR

» A monostable multivibrator, as the name implies, has only one stable state.

» A stable state is such a state where the transistor remains without being altered, unless disturbed by some external trigger pulse.

» As Monostable works on the same principle, it has another name called as one-shot multivibrator.

CONSTRUCTION

» Two transistors Q_1 and Q_2 are connected in feedback to one another.

» The collector of transistor Q_1 is connected to the base of transistor Q_2 through the capacitor C_1.

» the base Q_1 is connected to the collector of Q_2 through the resistor R_2 and capacitor C.

» Another dc supply voltage $-V_{BB}$ is given to the base of transi-stor Q_1 through the resistor R_3.

» The trigger pulse is given to the base of Q_1 through the capaci-tor C_2 to change to its state R_{L1} and R_{L2} are the load resistance of Q_1 and Q_2.

WORKING PRINCIPLE

» firstly, when the circuit is switched ON, transistor Q_1 will be in off state and Q_2 will be in ON state.

» This is the stable state.

» As Q_1 is OFF, the collector voltage will be Vcc at point A and hence C_1 gets charged.

» A positive trigger pulse applied at the base of the transistor the

transistor ON. This decreases the collector voltage, which turns off the transistor Q_2.

>> The capacitor C_1 starts discharging at this point of the time. As the positive voltage from the collector of transistor Q_2 gets applied to transistor Q_1, it remains in ON state.

>> This is the quasi-stable or meta-stable state.

>> The transistor Q_2 remains in OFF state, until the capacitor C_1 discharges completely. After this, the transistor Q_2 turns ON with the voltage applied through the capacitor discharge. This turn ON the transistor Q_1, which is the previous stable state.

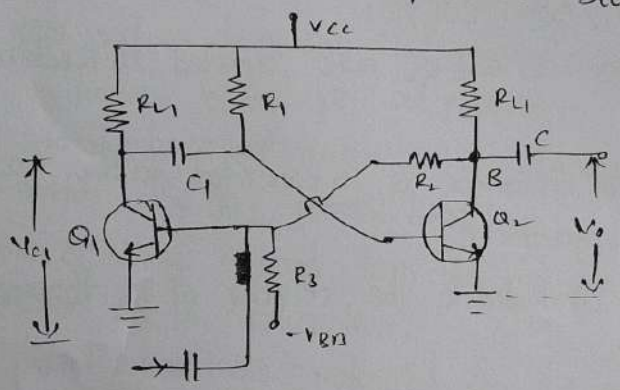

OUTPUT WAVEFORMS

>> The output waveforms at the collection of Q_1 and Q_2 along with the trigger input given at the base of Q_1 are shown in the following figures.

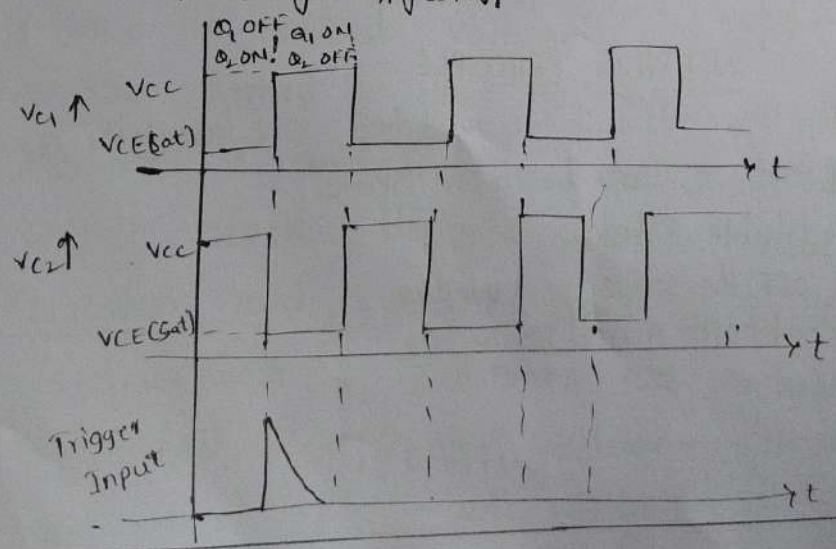

width of this output pulse depends upon the RC time constant. Hence it depends on the values of R_1C_1. The duration of pulse is given by,

$$T = 0.69 R_1 C_1$$

⇒ The trigger input given will be of very shot duration, just to initiate the action.

⇒ This triggers the circuit to change the its state from stable state to Quasi-stable or meta-stable or Semi-stable state, in which the circuit remains for a short duration.

⇒ There will be output pulse for one trigger pulse.

11) Explain the operation of schmitt trigger using transistor

A) Schmitt is an Important bistable multivibrator. It is called schmitt trigger after the name of its Inventor.

* Using transistor it is basically an emitter)

* Schmitt trigger is a wave shaping circuit used to generate a square wave from any periodic signal such as sine, triangular, square etc.

* It is a bistable circuit whose output states are controlled by the Input signal.

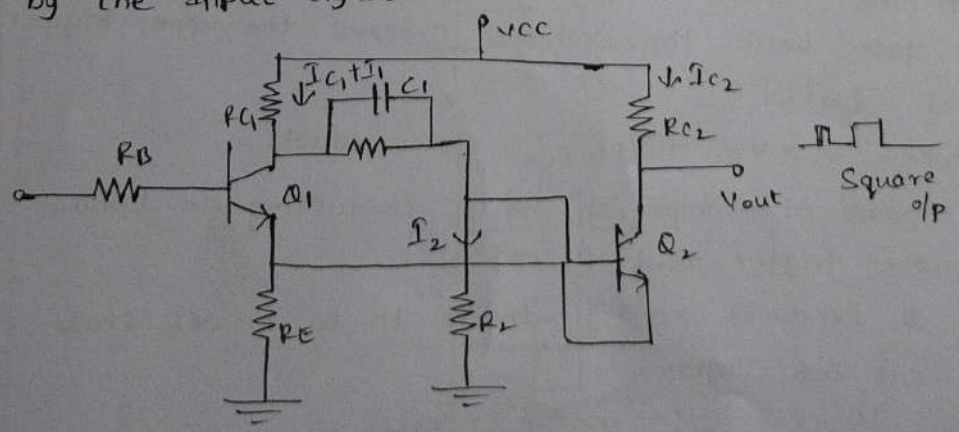

Construction :-

* It consists of two identical transistors Q_1 & Q_2 which connected regeneratively through R_E.
* R_1 & R_2 are potential divider resistors.

Operation :-

(i) without any Input signal :-

when supply voltage V_{CC} is switched on the transistor 'Q_2' starts conducting & the current causes a voltage drop across 'R_E'.

$$V_{RE} = I_E R_E$$

* This voltage provides a R.B across Emitter Base Junction of Q_1 & drives it into cut-off state.
* Q_1 is in off state & the voltage at collector rises to V_{CC}.
* This will increase the Feedback of Q_2.

$$V_{C1} = V_{CC}$$
$$V_{C2} = V_{CE}(sat) + V_{RE}$$

(ii) with an Input signal :-

when the Input is applied to Q_1, it remains in OFF state until the voltage crosses the upper trigger level (UTL).

when $V_i > V_{RE} + V_{BE1}$, Q_1 conducts.

* The point at which 'Q_1' starts conducting is known as upper Trigger point (UTP)
* As Q_1 conducts, Q_2 is driven to be in OFF state, i.e, cut-off region.

Hence, $V_{C1} = V_{CE}(sat) + V_{RE}$

$$V_{C2} = V_{CC}$$

conducts till the Input voltage crosses the lower trigger level (LTL).

* The pt at which Q_1 is OFF & Q_2 starts conducting is called as lower Triggering point (LTP).

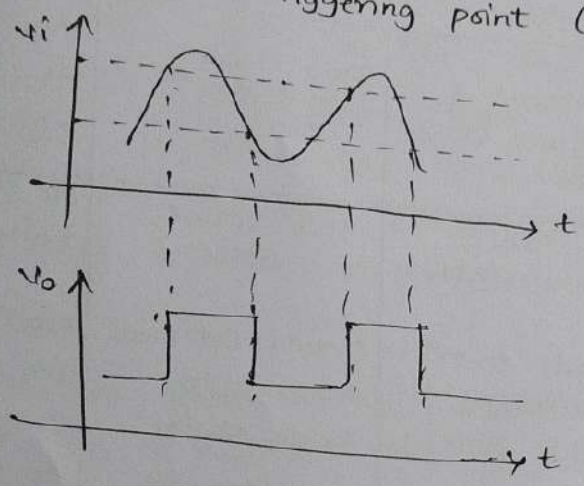

V_{UTP} is always greater than V_{LTP}.

Hysteresis loop :-

In Schmitt trigger the output state remains same until the Vi crosses any of the threshold levels (UTL and LTL).

* The difference b/w UTP & LTP is known as Hysteresis voltage (V_H).

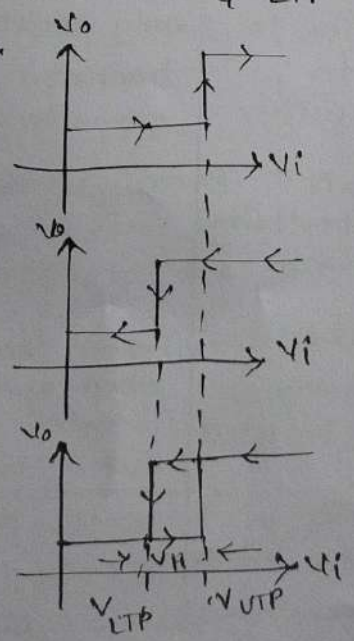

(12) Comparision between Astable, Monostable & Bistable Multivibrator?

A)

Feature	Monostable Multivibrator	Bistable Multivibrator	Astable Multivibrator.
Definition	Onestable & onequasi stable state.	Two stable states	No stable state, oscillates continu-ously.
Stable states	one stable, one unstable	Two stable states	No stable state, both are temporary
Triggering	Needs an exter-nal trigger to switch states.	Needs External triggers to toggle state.	No external trigger required, oscillates on its own.
Oscillation	No automatic oscillation.	No automatic oscillation.	continuous oscill-ation without Input.
Pulse Generation	Single output pulse when triggered.	Holds binary state until never trigger.	continous square wave output.
Application:	Times, delay, circuits.	Memory storage	clock circuits, waveform.
Components used	1 capacitor, 2 resistor, 2 transistors.	only resistors & transistors, no capacitor.	2 capacitors, 2 resistors, 2 transistor.
Circuit complexity	Moderate complexity	Simple design.	slightly Complex due to continous oscillation.
Power consumption	low power, active only when triggered	Power used when switching between states	Continuous power consumption due to oscillation.
Example Circuits	555 timer in monostable mode one-shot circuit	SR flip-flop, memory circuits.	555 timer in astable mode, LED flasher.

Describe the working principle of Bistable multivibrator?

* Bistable Multivibrator have two stable states.
* The bistable multivibrator can be switched over from one stable state to the other by the application of an external trigger pulse.
* As bistable multivibrators have two stable states they are more commonly known as latches and Flip Flops use in sequential type circuits.

Construction :-

* Two similar transistors Q_1 & Q_2 with load ~~resistance~~ resistors R_{L1} & R_{L2} are connect in feedback to one another.
* The base resistors R_3 & R_4 are joined to a common source.
* the Feedback resistors R_1 & R_2 are shunted by capacitors C_1 & C_2 known as commutating capacitors.
* The transistor Q_1 is given as trigger input at the base through the capacitor C_3 and the transistor Q_2 is given a trigger input at its base through the capacitor C_4.
* The capacitor C_1 & C_2 are also known as speed-up capacitors, as they reduce the transition time, which means the time taken for the transfer of conduction from one transistor to the other.
* When the circuit is switched ON, one of the transistors, say Q_1 gets switched ON, while the transistor Q_2 gets switched OFF.

* By applying a negative trigger at the base of transistor Q_1 on applying a positive trigger pulse at the base of transistor Q_2 this stable state is altered.
* Now by applying a negative pulse at the base of transistor. As a result, the collector voltage increases, which forward biases the transistor Q_2.
* The collector current of Q_2 as applied at the base of Q_1, reverse biases Q_1 and this cummulative action, makes the transistor Q_1 OFF and transistor Q_2 ON.

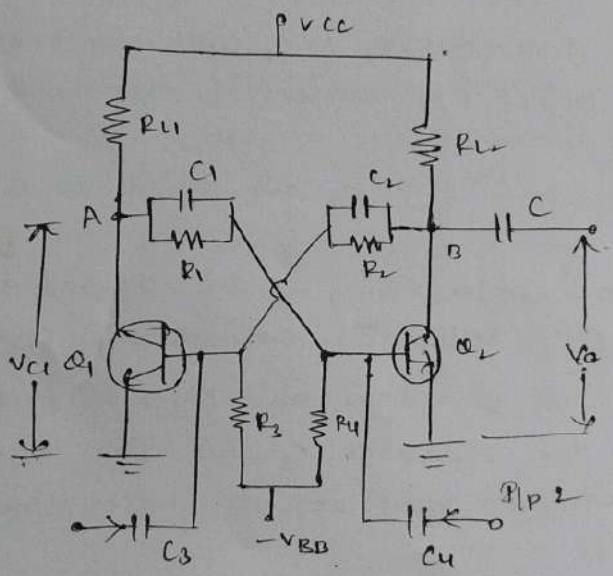

Output waveforms :-
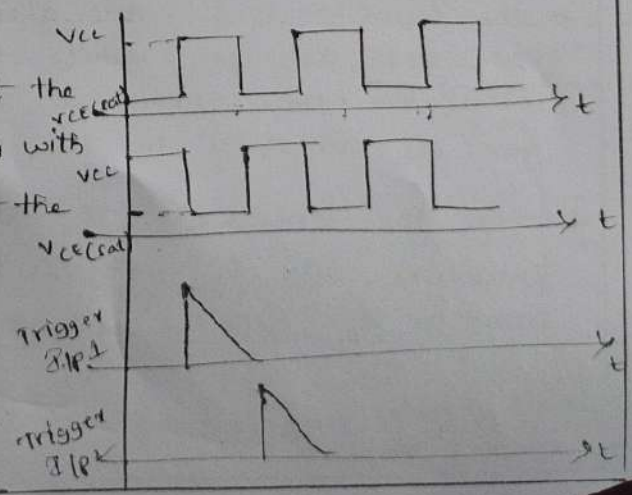
* The output waveforms at the collectors of Q_1 & Q_2 along with the trigger I/P given at the base of Q_1 & Q_2 are shown in fig.